BL50F25

Application：**Electric Drill、Electric Hammer、Impact Wrench**

用途：電鑽、電錘、衝擊扳手

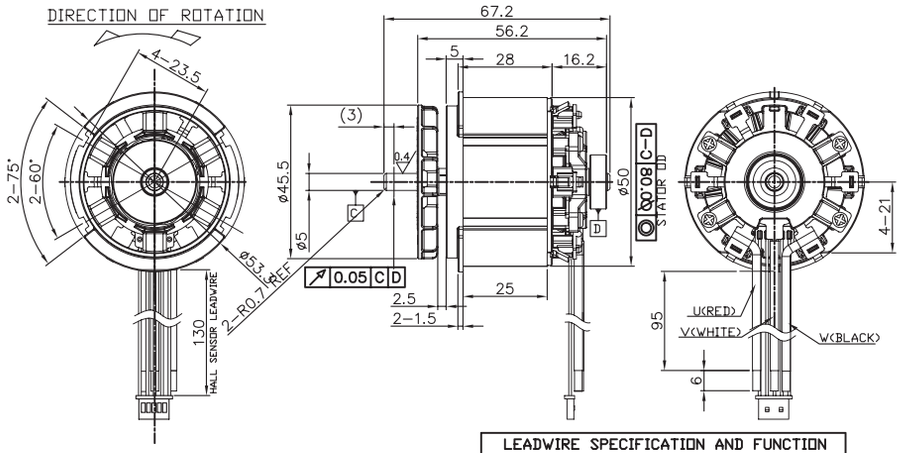

WEIGHT:340g(APPROX)

External Controller
外 置 控 制 器

LEADWIRE SPECIFICATION AND FUNCTION

ITEMS	HALL SENSOR LEADWIRE					MOTOR COIL		
LEADWIRE	+3.3V	HW	HU	GND	HV	U	V	W
COLOR	RED	GREEN	BLUE	BLACK	YELLOW	RED	WHITE	BLACK

MODEL	VOLTAGE		NO LOAD		AT MAXIMUM EFFICIENCY						STALL		
	OPERATING RANGE	NOMINAL	SPEED	CURRENT	SPEED	CURRENT	TORQUE		OUTPUT	EFF	CURRENT	TORQUE	
			rpm	A	rpm	A	Kg-cm	mN-m	W	%	A	Kg-cm	mN-m
BL50F25S-18V26K600W-B1X0N	18.0-21.6V	18.0V CONSTANT	26000	6.20	22520	48.0	3.00	294	704	82	240	18.0	1765
BL50F25S-21.6V22K450W-B1X0N	18.0-21.6V	21.6V CONSTANT	22000	5.20	19120	26.6	2.20	215	446	79	182	17.5	1716

馬達的出軸長度及性能參數，EMC 對策可依客人要求做調整，詳情可詢問相關業務人員。
Please inquire your sales representative for output,performance and EMC solution.

BL50F25S-18V26K600W-B1X0N 18.0V

Volt	Amp	Eff(%)	W(out)	kRPM
20.0	300.0	100	2000.0	30.0
18.0	270.0	90	1800.0	27.0
16.0	240.0	80	1600.0	24.0
14.0	210.0	70	1400.0	21.0
12.0	180.0	60	1200.0	18.0
10.0	150.0	50	1000.0	15.0
8.0	120.0	40	800.0	12.0
6.0	90.0	30	600.0	9.0
4.0	60.0	20	400.0	6.0
2.0	30.0	10	200.0	3.0
0.0	0.0	0	0.0	0.0

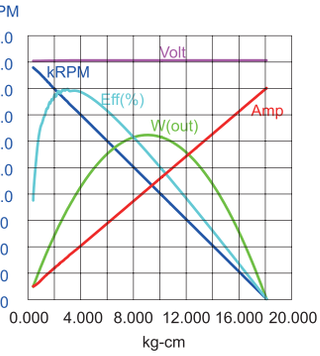

BL50F25S-21.6V22K450W-B1X0N 21.6V
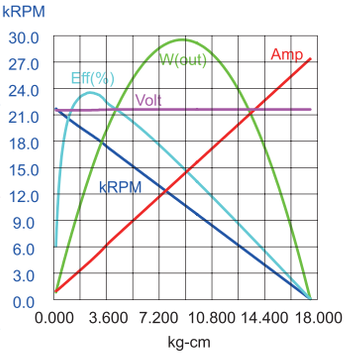
Volt	Amp	Eff(%)	W(out)	kRPM
30.0	200.0	100	1000.0	30.0
27.0	180.0	90	900.0	27.0
24.0	160.0	80	800.0	24.0
21.0	140.0	70	700.0	21.0
18.0	120.0	60	600.0	18.0
15.0	100.0	50	500.0	15.0
12.0	80.0	40	400.0	12.0
9.0	60.0	30	300.0	9.0
6.0	40.0	20	200.0	6.0
3.0	20.0	10	100.0	3.0
0.0	0.0	0	0.0	0.0